Diritti riservati All rights reserved

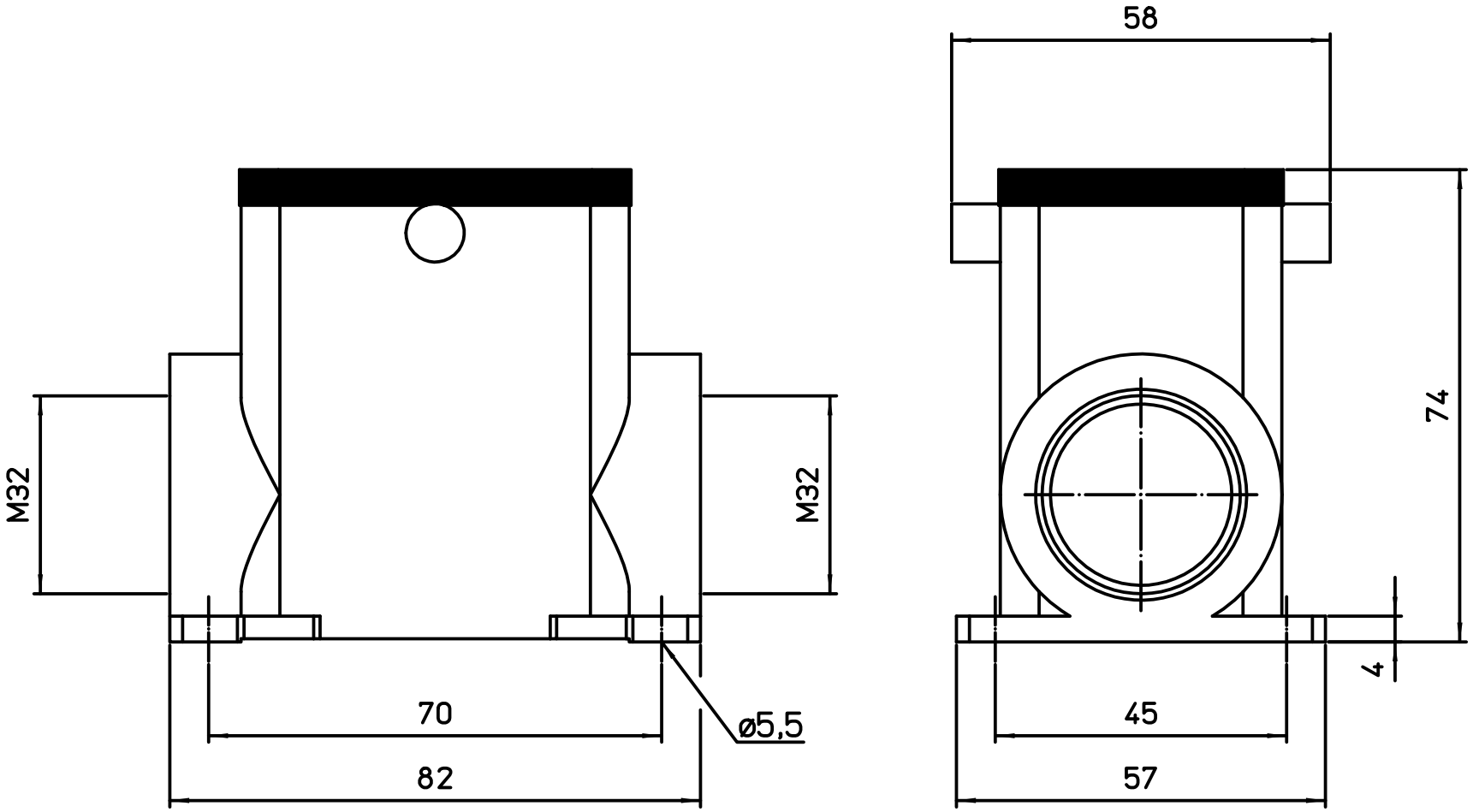

dimensions in mm	
Date	13/11/18
Sign.	D.Cominelli

MAP 06 YC232

Surface muonting housing for central lever, 2xM32

Scale 1:1